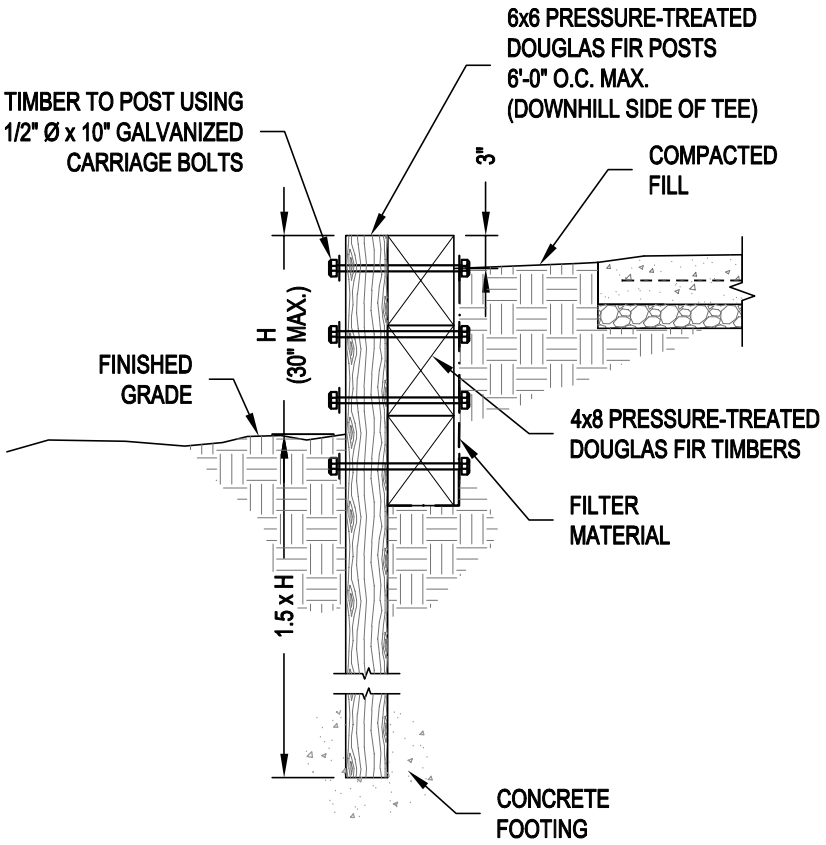

LATERAL SECTION

SCALE: 3/4" = 1'-0"

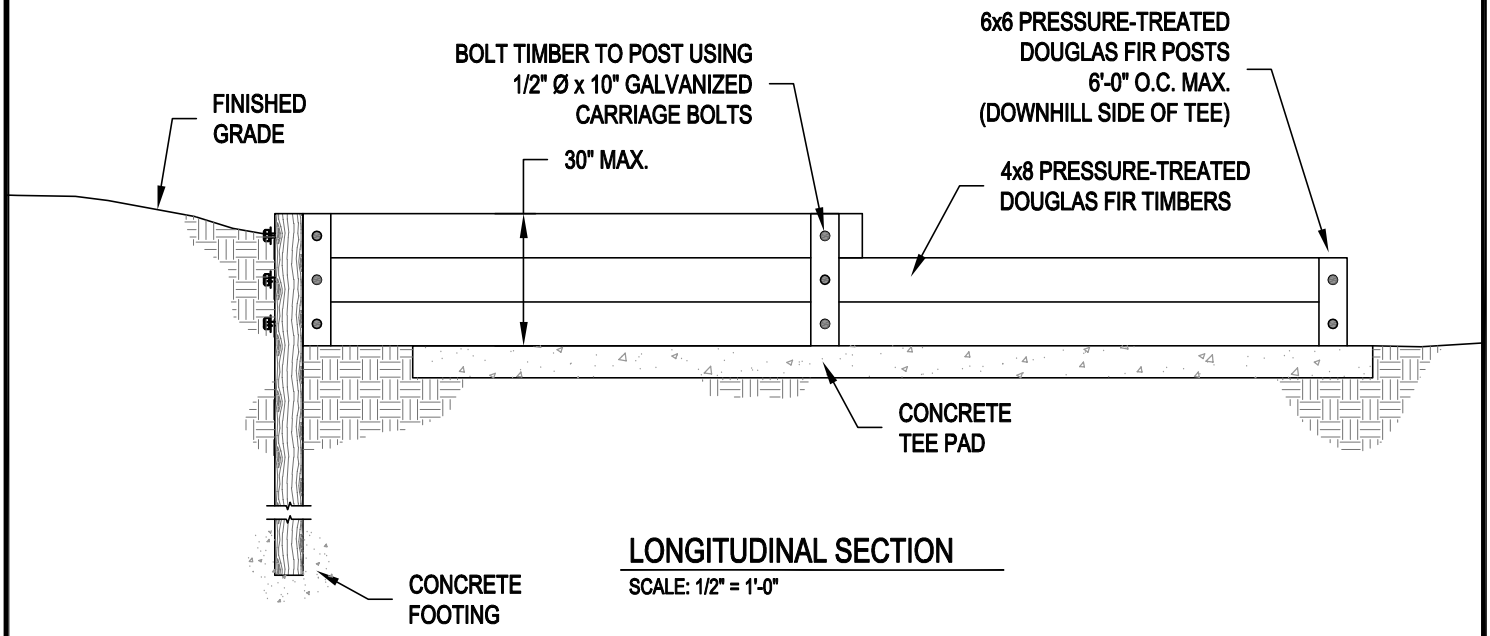

LONGITUDINAL SECTION

SCALE: 1/2" = 1'-0"

SAN FRANCISCO
DISC GOLF

GOLDEN GATE DISC GOLF COURSE

RETAINING WALL SECTIONS

DATE: SEPTEMEBER 2006

SCALE: AS NOTED